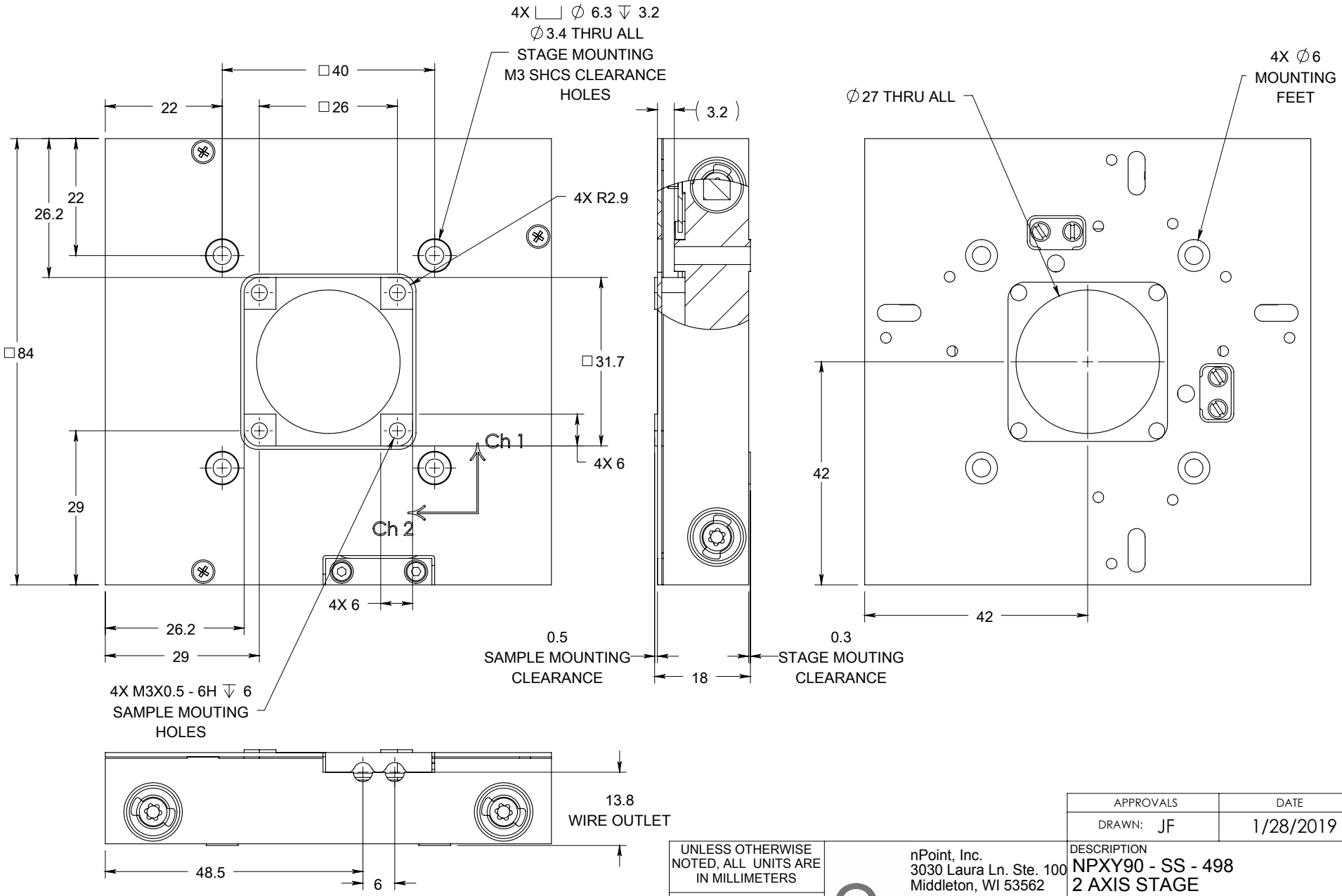

APPROVALS	DATE
DRAWN: JF	1/28/2019

UNLESS OTHERWISE NOTED, ALL UNITS ARE IN MILLIMETERS

THIRD ANGLE PROJECTION

nPoint, Inc.
3030 Laura Ln. Ste. 100
Middleton, WI 53562

Phone: (608) 824-1770
Fax: (608) 824-1774
www.npoint.com

DESCRIPTION
NPXY90 - SS - 498
2 AXIS STAGE
XY 90um

NUMBER	REV.	
3715498	A	SHEET 1 OF 1